# 9.3 BOTTOM SECTION

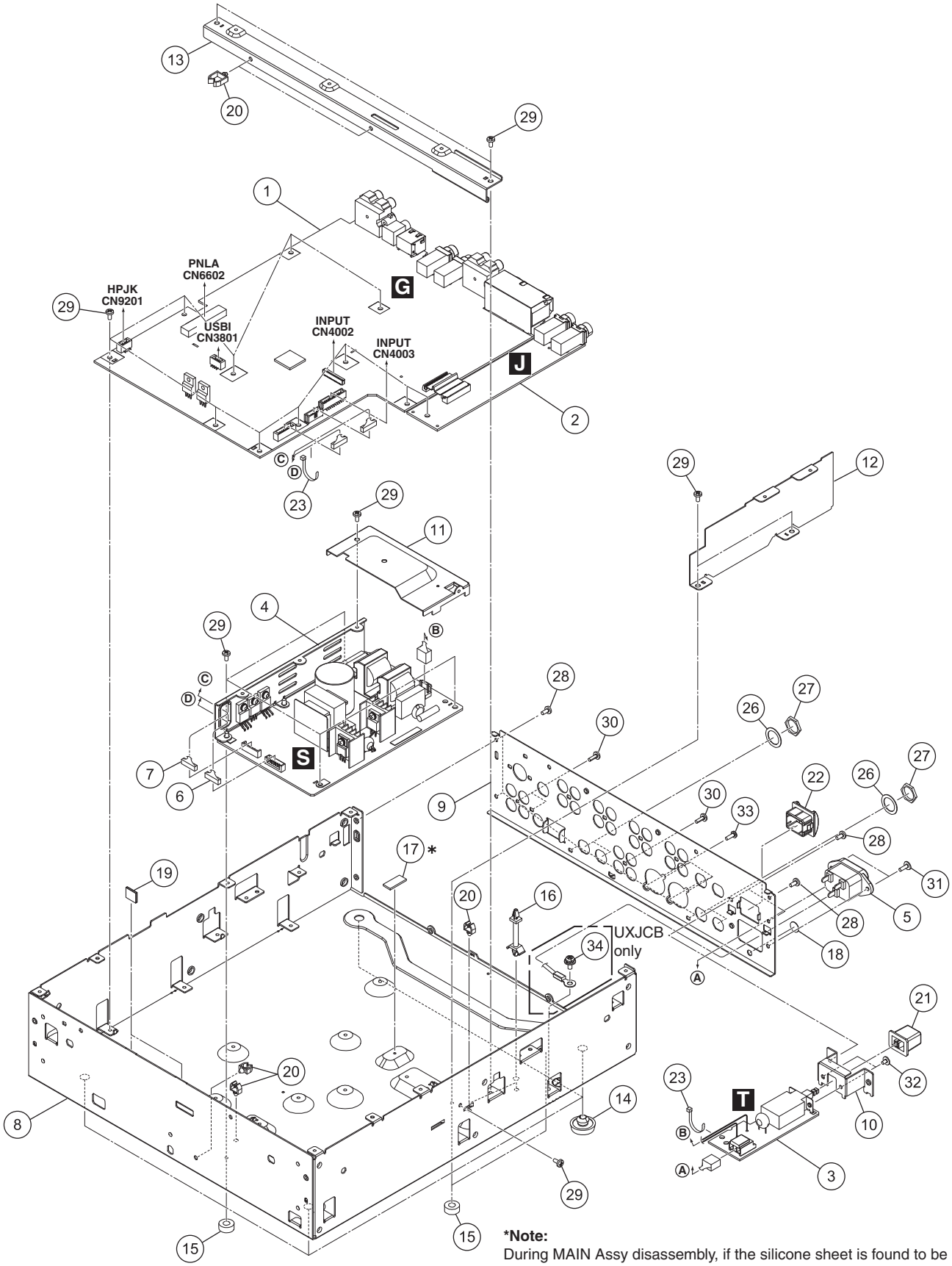


***Note:**
During MAIN Assy disassembly, if the silicone sheet is found to be deformed, replace it with a new one.