EXPLODED VIEW (DRIVE MECHANISM)

G	M2x2.5	: N09-6361-05
H	M1.7x3.7	: N09-6363-05
J	M2x2.5	: N09-6375-05
K	M2x3.5	: N09-6376-05
L	M2x2.5	: N09-6377-05
M	ϕ2x2	: N09-6378-05
N	M2.6x4	: N09-6379-05
Y	WASHER	: N19-2321-04

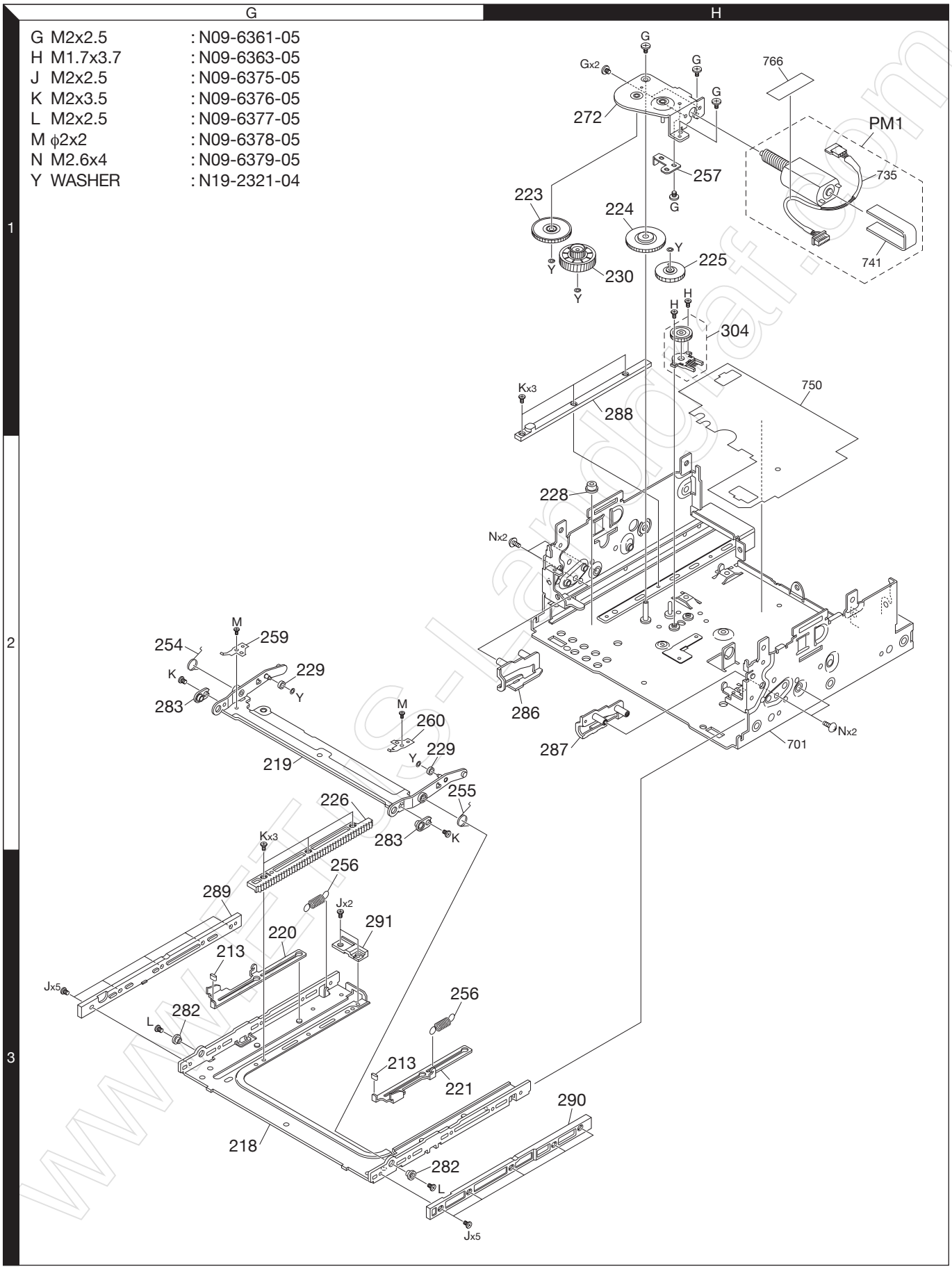

Parts with the exploded numbers larger than 700 are not supplied.