# RXD-M51/M51MD

## EXPLODED VIEW (CD MECHANISM)

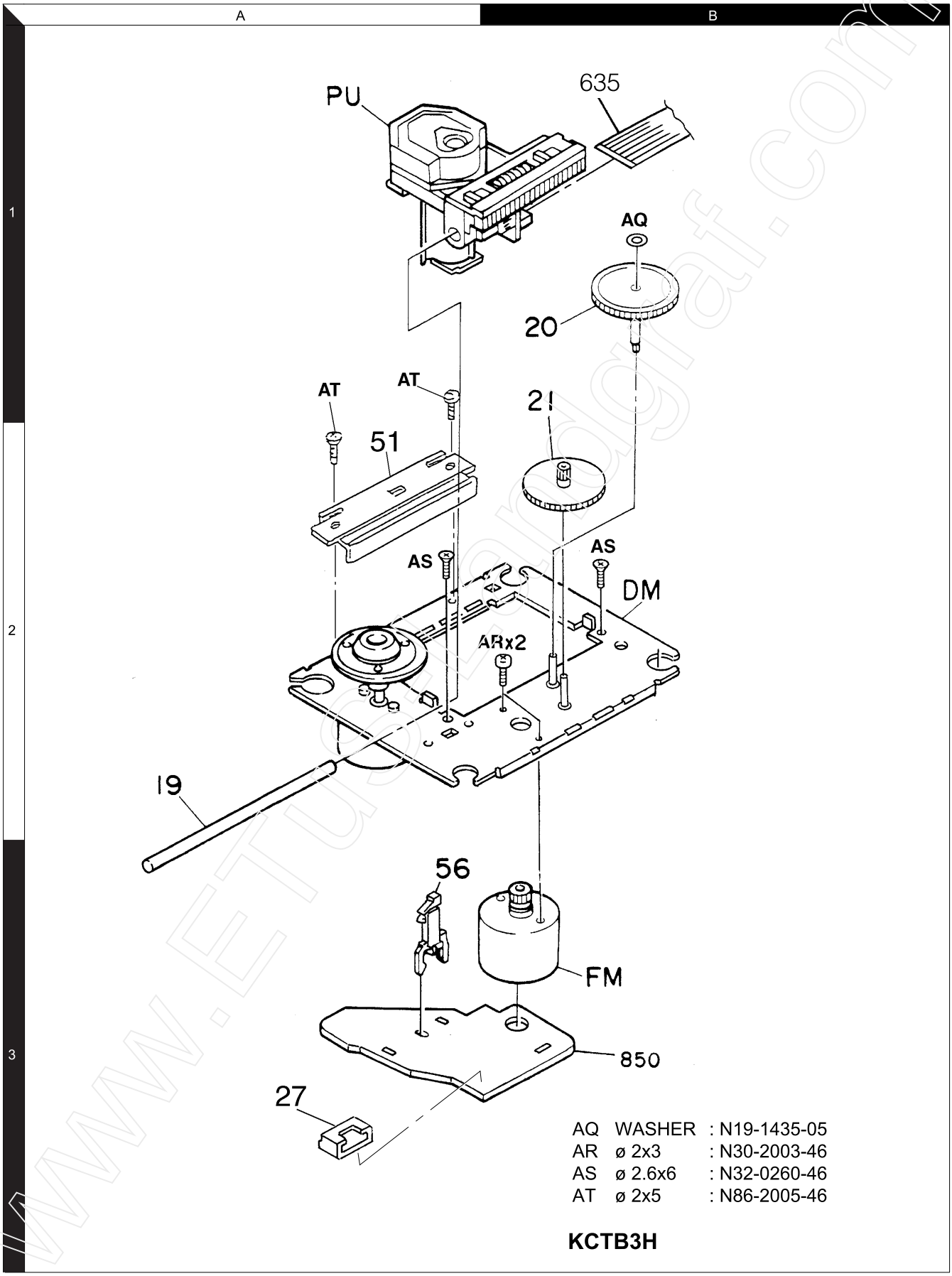


| | | |
|---|---|---|
| AQ | WASHER | : N19-1435-05 |
| AR | ø 2x3 | : N30-2003-46 |
| AS | ø 2.6x6 | : N32-0260-46 |
| AT | ø 2x5 | : N86-2005-46 |

**KCTB3H**

Parts with the exploded numbers larger than 700 are not supplied.

# RXD-M51/M51MD

## EXPLODED VIEW (MD MECHANISM)

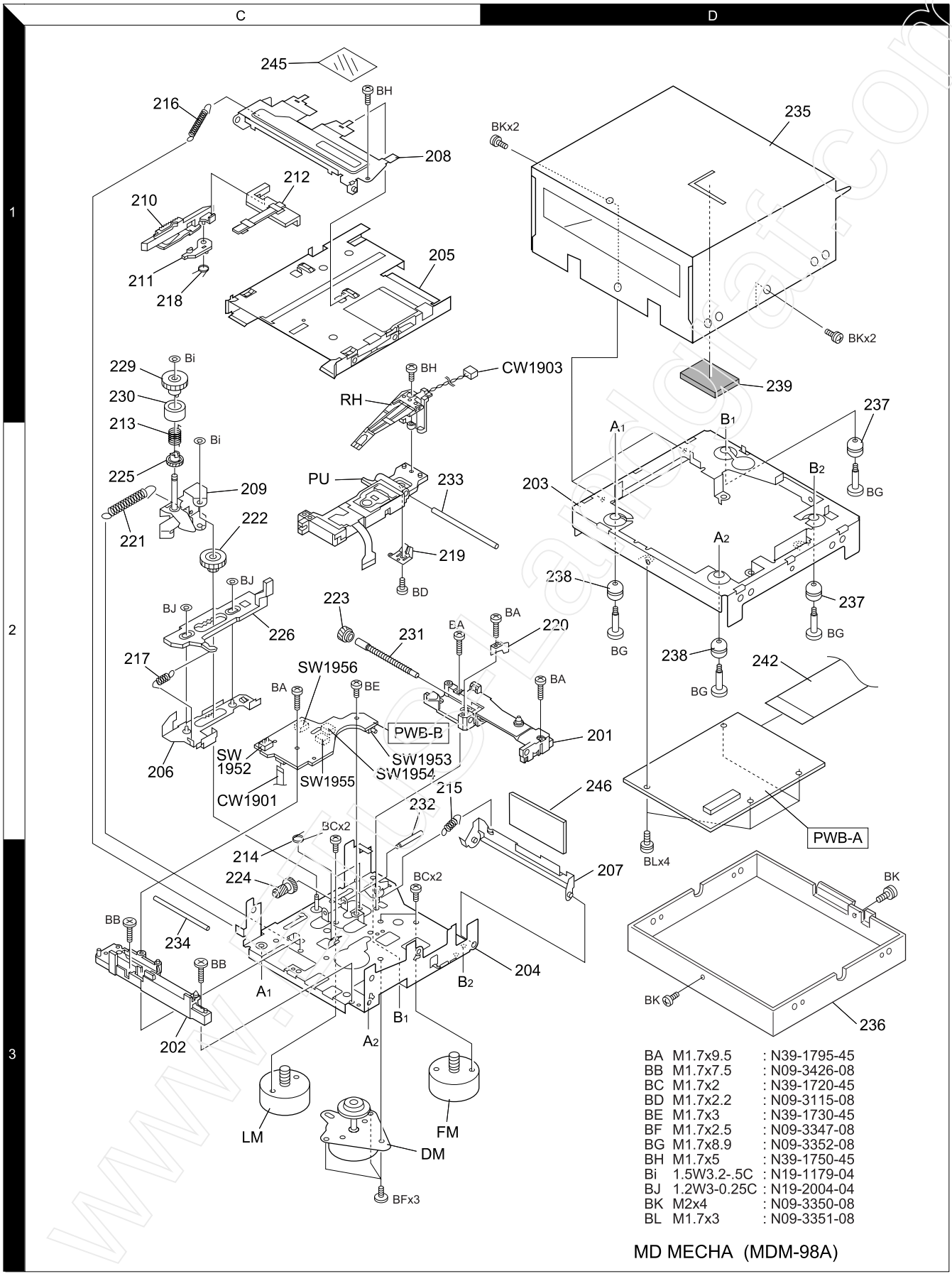


| | | | |
|---|---|---|---|
| BA | M1.7x9.5 | : | N39-1795-45 |
| BB | M1.7x7.5 | : | N09-3426-08 |
| BC | M1.7x2 | : | N39-1720-45 |
| BD | M1.7x2.2 | : | N09-3115-08 |
| BE | M1.7x3 | : | N39-1730-45 |
| BF | M1.7x2.5 | : | N09-3347-08 |
| BG | M1.7x8.9 | : | N09-3352-08 |
| BH | M1.7x5 | : | N39-1750-45 |
| Bi | 1.5W3.2-.5C | : | N19-1179-04 |
| BJ | 1.2W3-0.25C | : | N19-2004-04 |
| BK | M2x4 | : | N09-3350-08 |
| BL | M1.7x3 | : | N09-3351-08 |

MD MECHA (MDM-98A)

Parts with the exploded numbers larger than 700 are not supplied.

# RXD-M51/M51MD

## EXPLODED VIEW (CASSETTE DECK MECHANISM)

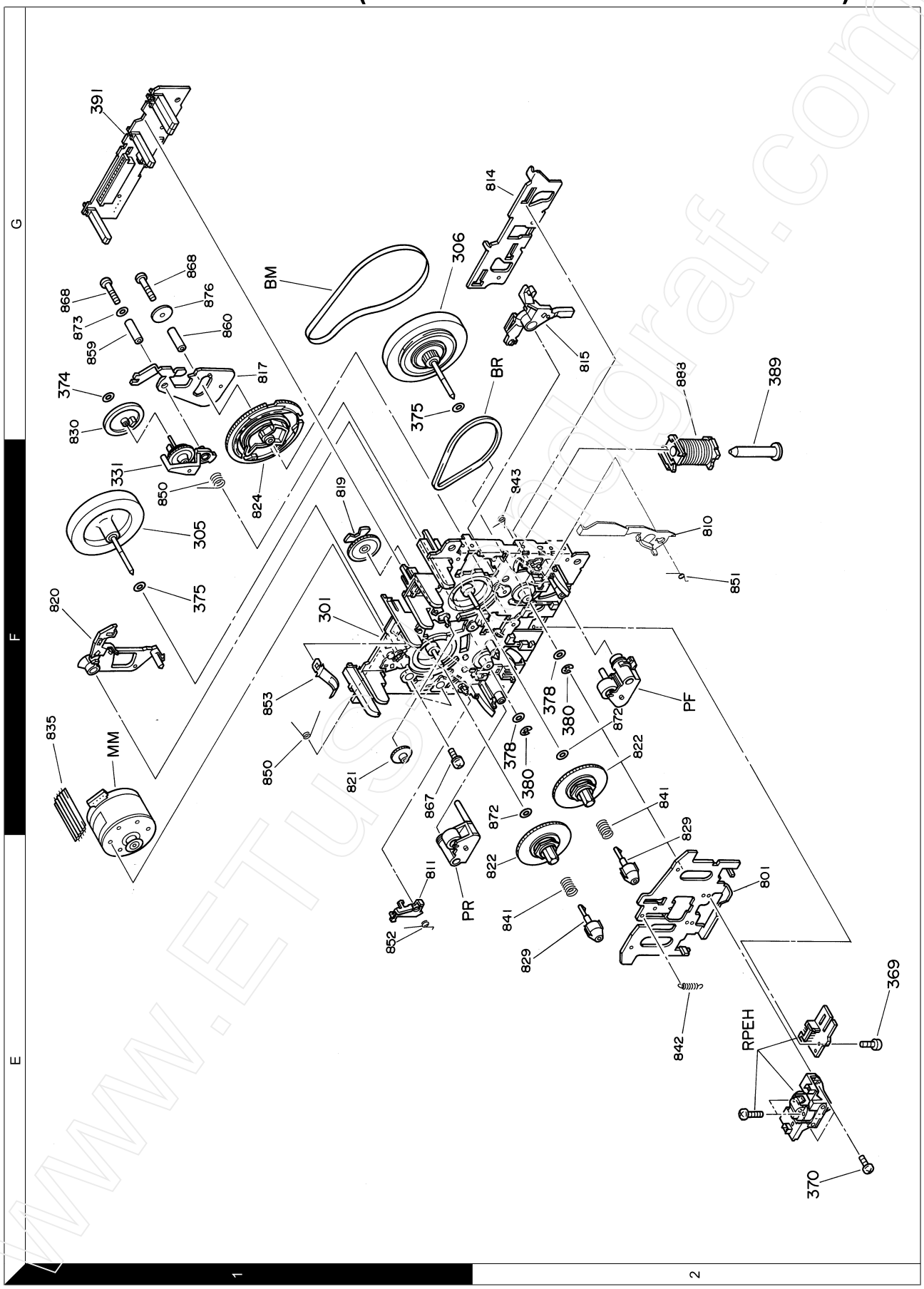


www.ETuS-Telegraf.com



Parts with the exploded numbers larger than 700 are not supplied.

# RXD-M51/M51MD

## EXPLODED VIEW (UNIT)

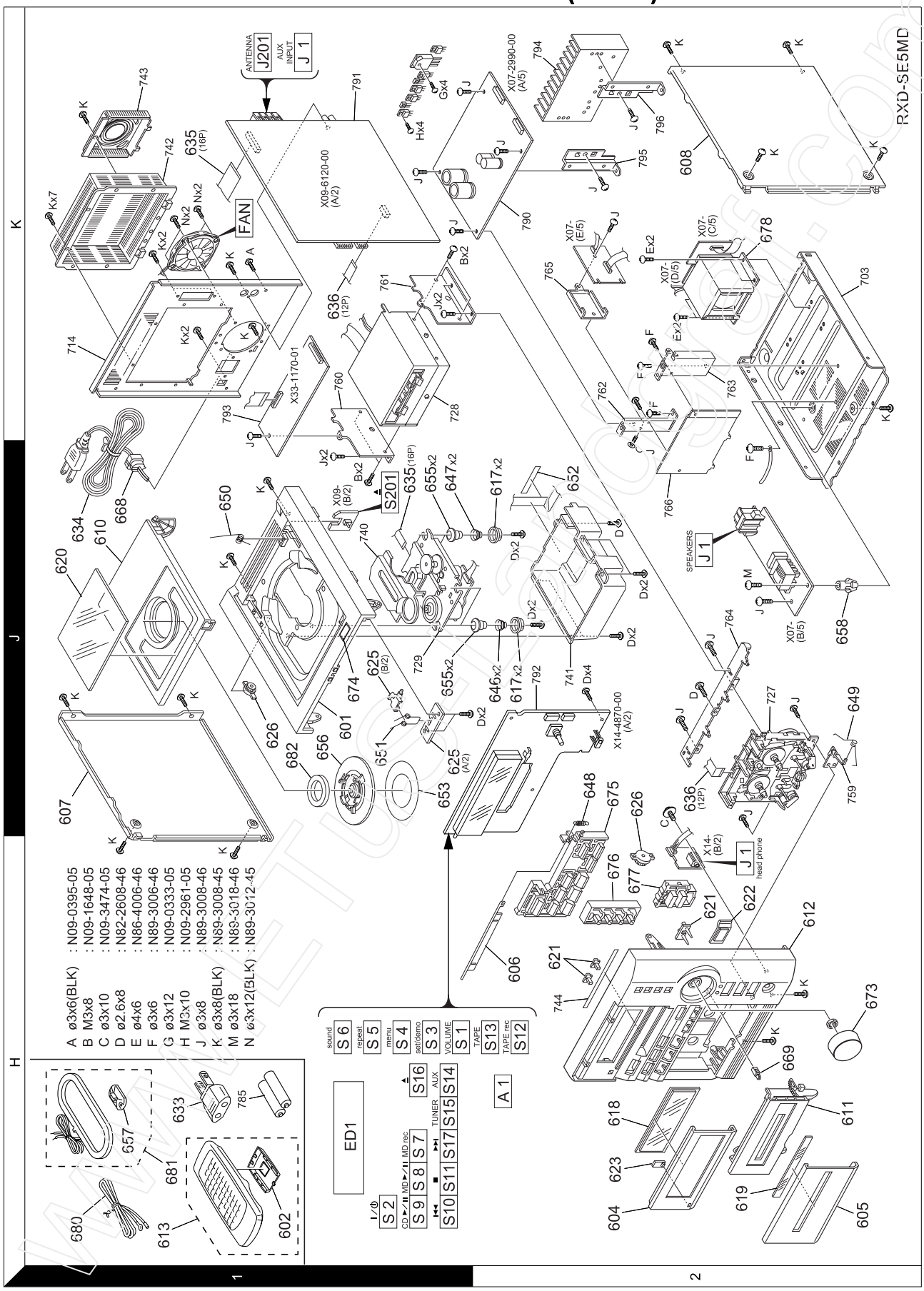




Parts with the exploded numbers larger than 700 are not supplied.