9.2 BOTTOM SECTION

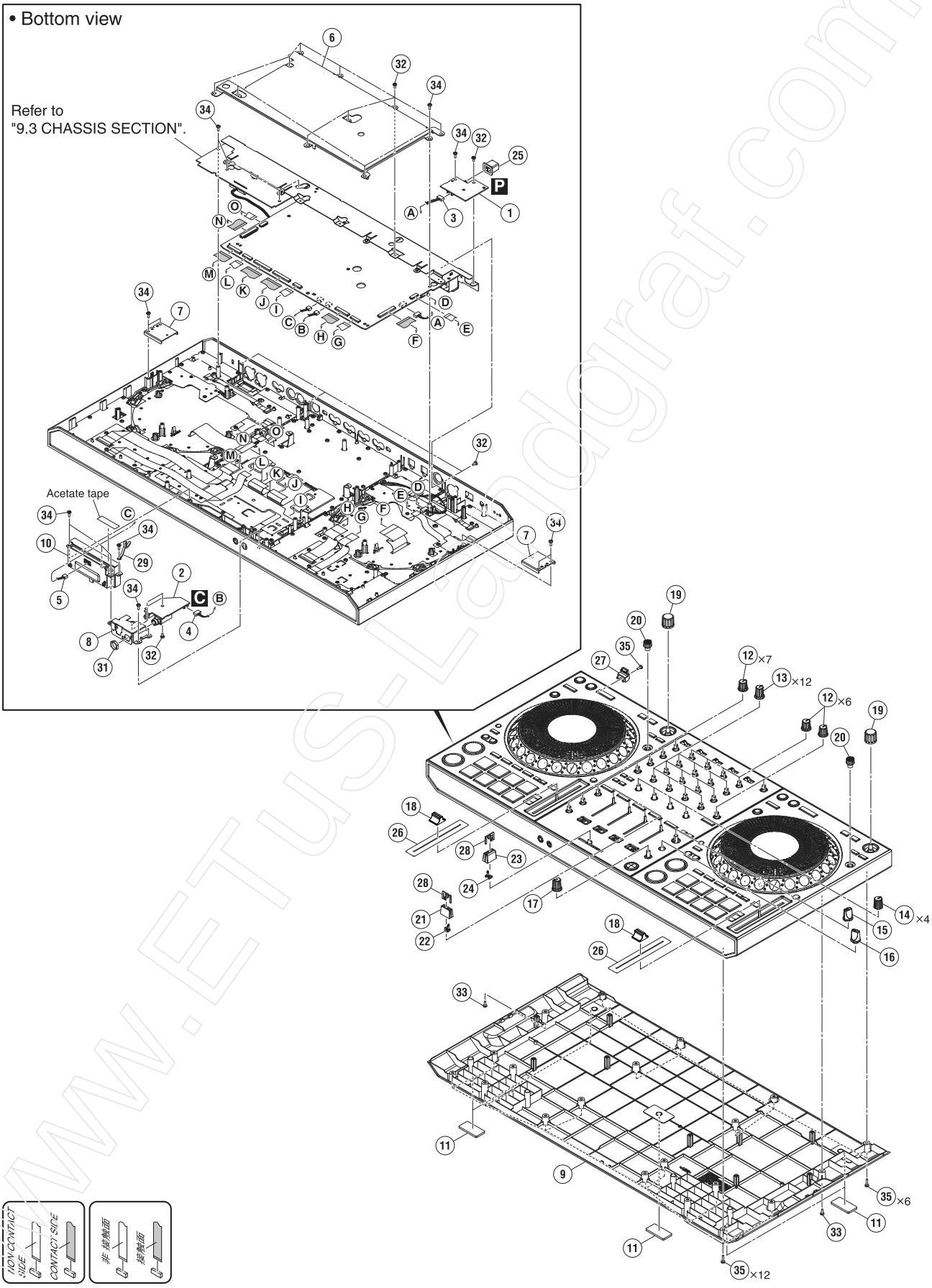

www.ETUS-Landgraf.com

9.3 CHASSIS SECTION

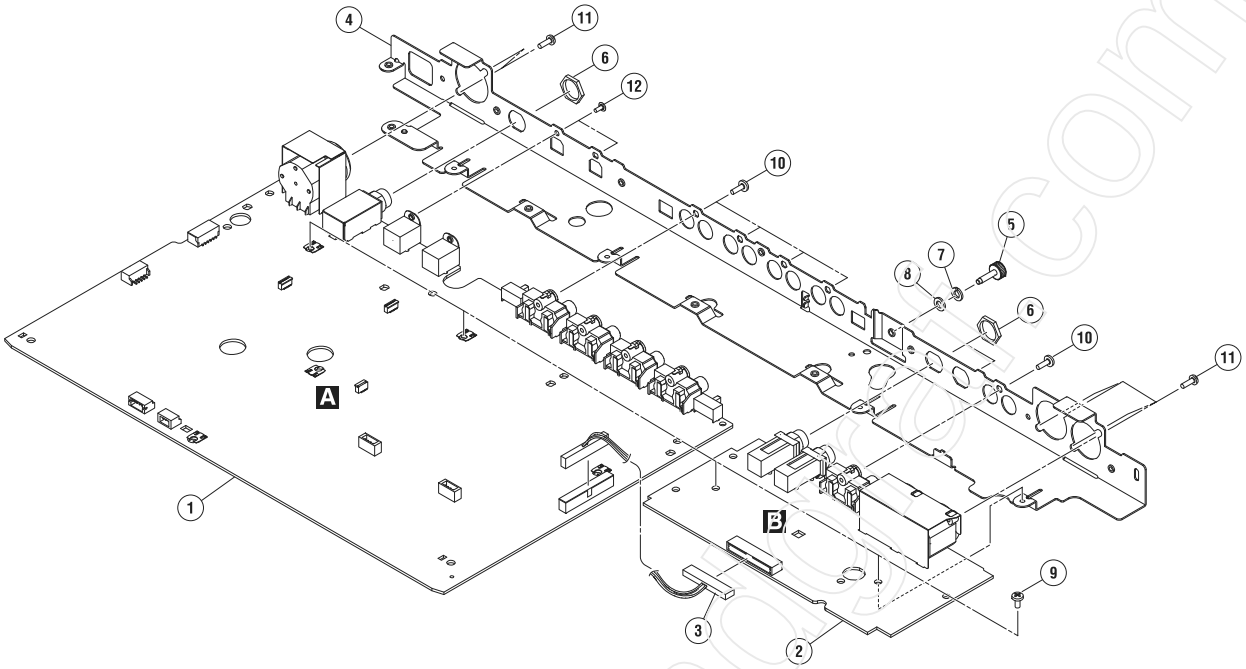

CHASSIS and CROSSFADER SECTION PARTS LIST

Mark	No.	Description	Part No.
	1	MAIN Assy	DWX4104
	2	MOUT Assy	DWX4115
	3	Crimp Connector	PF16PP-D15
	4	Stay	DNH3341
	5	Earth Terminal	DKE1015
	6	Nut	NKX2FTC
	7	Spring Lock Washer	WS40FNI
	8	Washer	WA32F100Q050
	9	Screw	BBZ30P060FTB
	10	Screw	BPZ30P080FTB
	11	Screw	PPZ30P080FTB
	12	Screw (M3*5)	DBA1340

www.tus-lan.com

9.4 CONTROL PANEL SECTION (1/2)

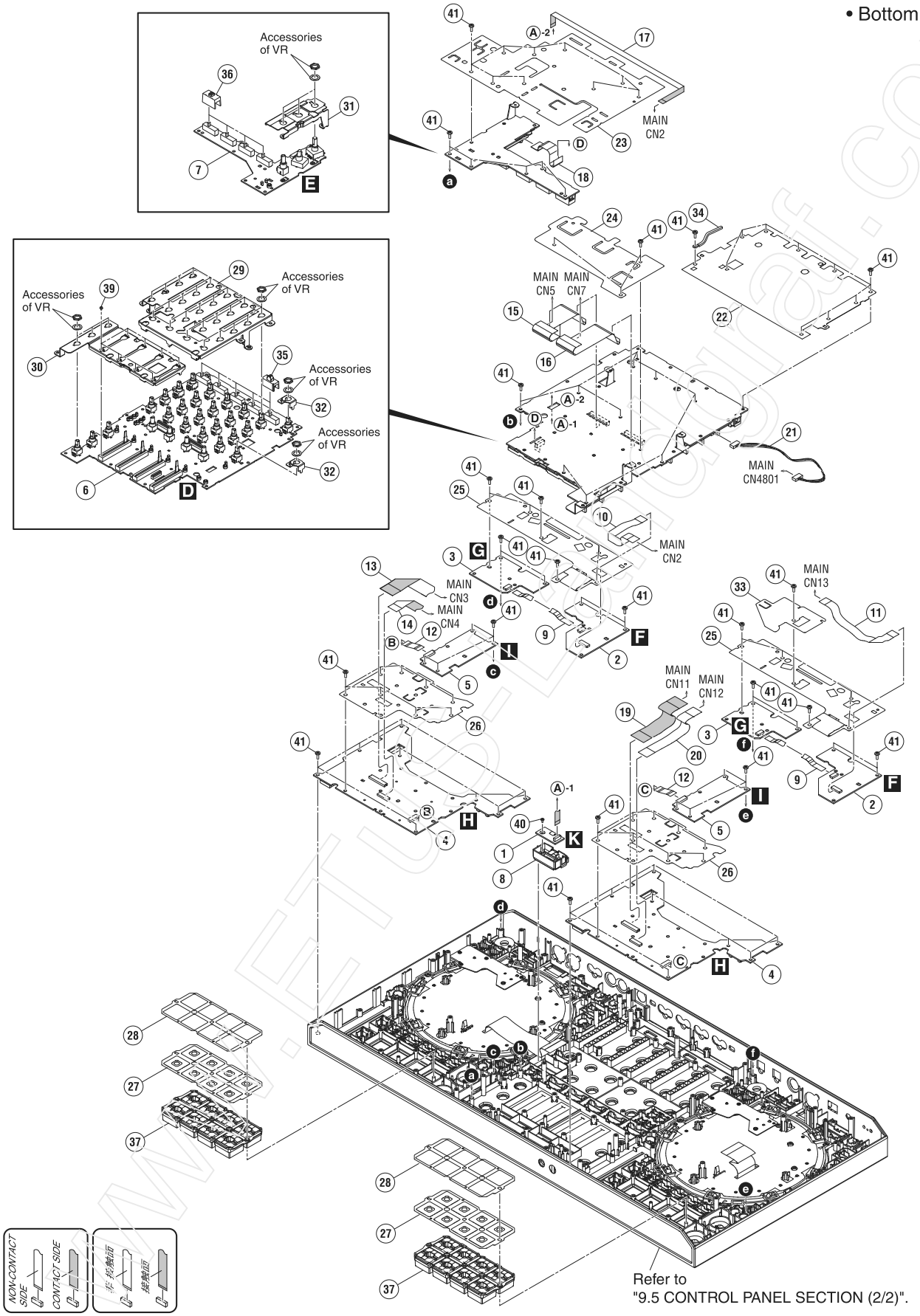

Refer to "9.5 CONTROL PANEL SECTION (2/2)".

9.5 CONTROL PANEL SECTION (2/2)

• Bottom view

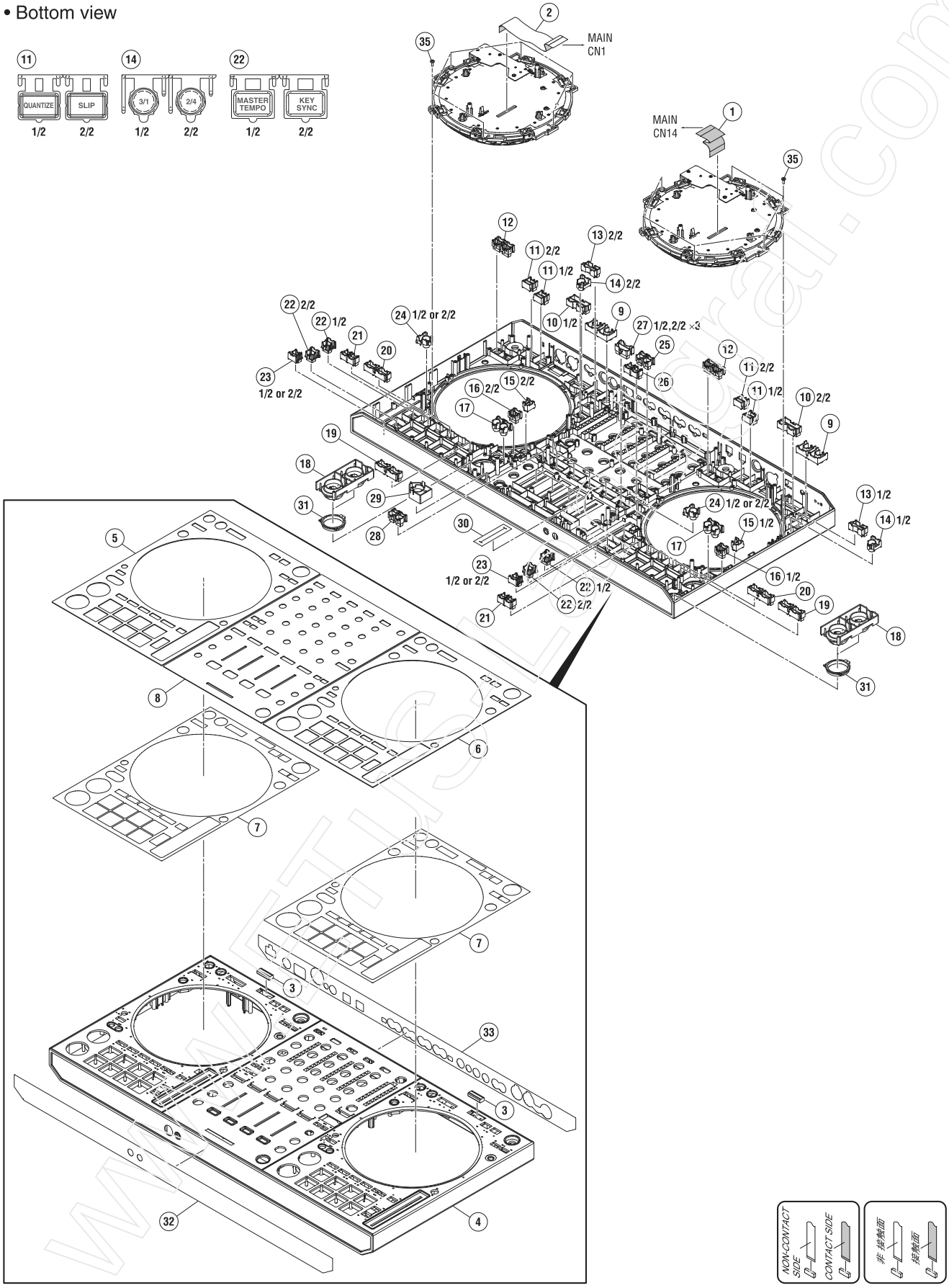

9.6 JOG DIAL SECTION

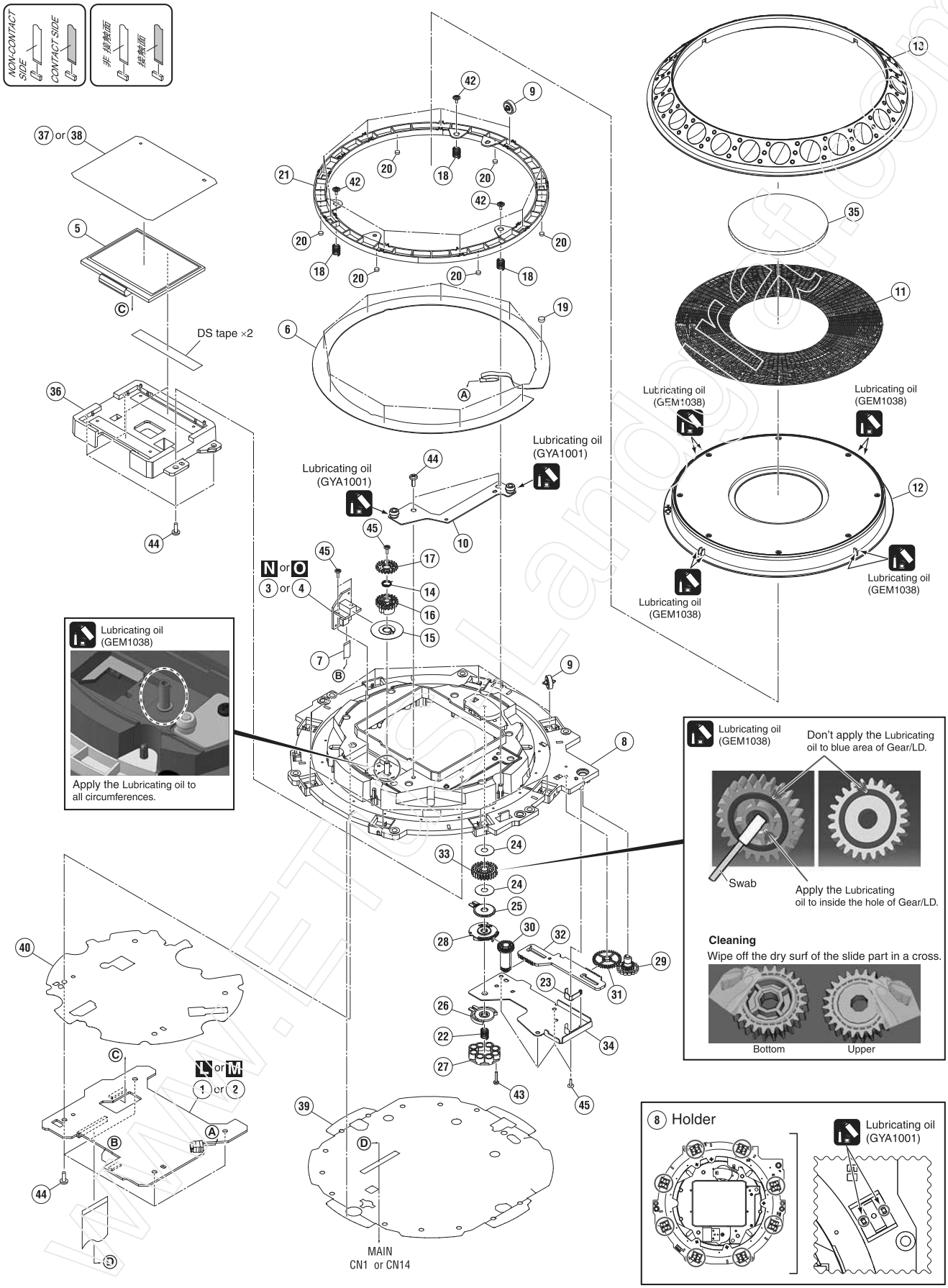

www.ITmanuals.com