EXPLODED VIEW (UNIT)

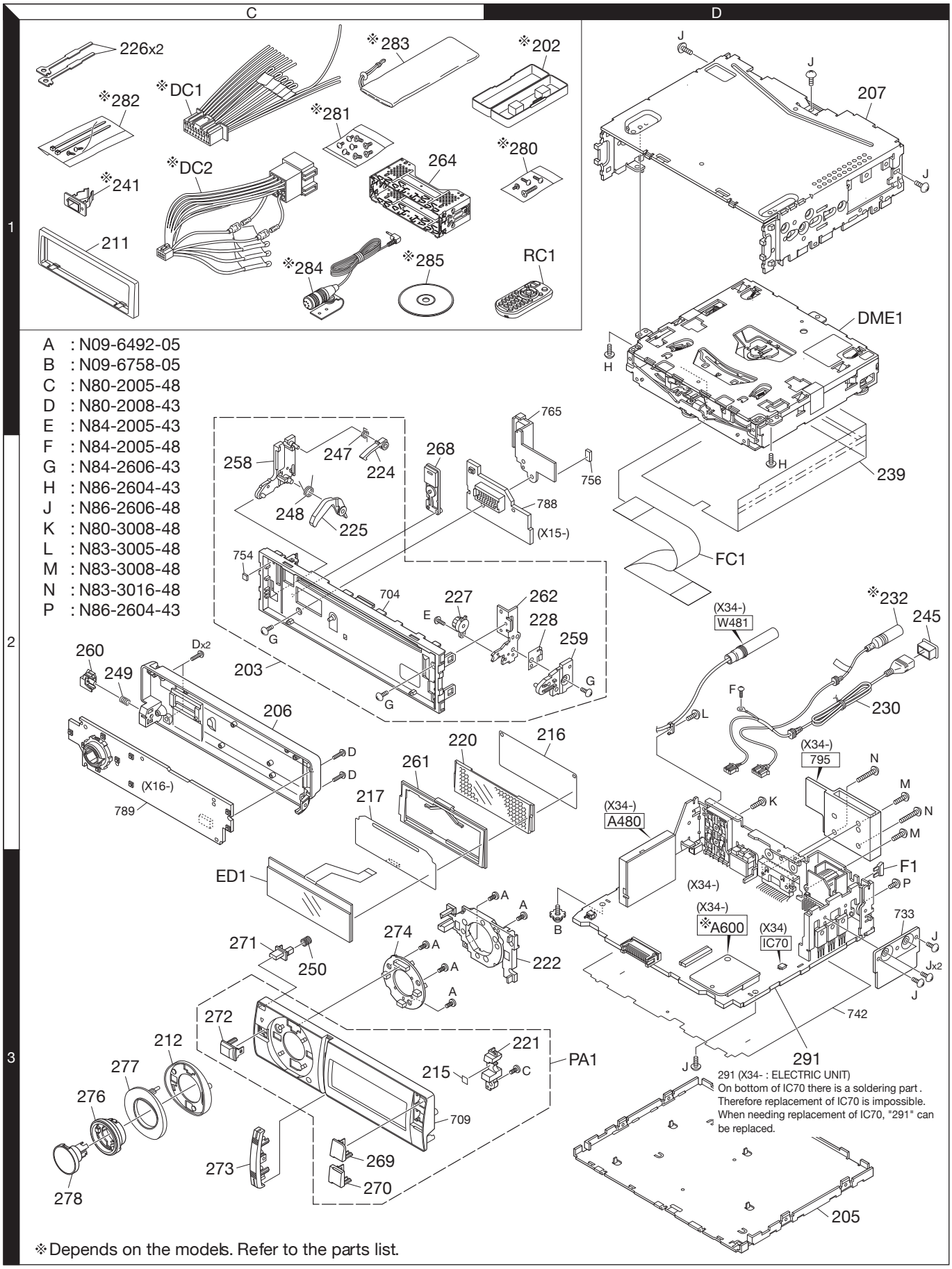

A : N09-6492-05
B : N09-6758-05
C : N80-2005-48
D : N80-2008-43
E : N84-2005-43
F : N84-2005-48
G : N84-2606-43
H : N86-2604-43
J : N86-2606-48
K : N80-3008-48
L : N83-3005-48
M : N83-3008-48
N : N83-3016-48
P : N86-2604-43

※Depends on the models. Refer to the parts list.

Parts with the exploded numbers larger than 700 are not supplied.