EXPLODED VIEW (UNIT)

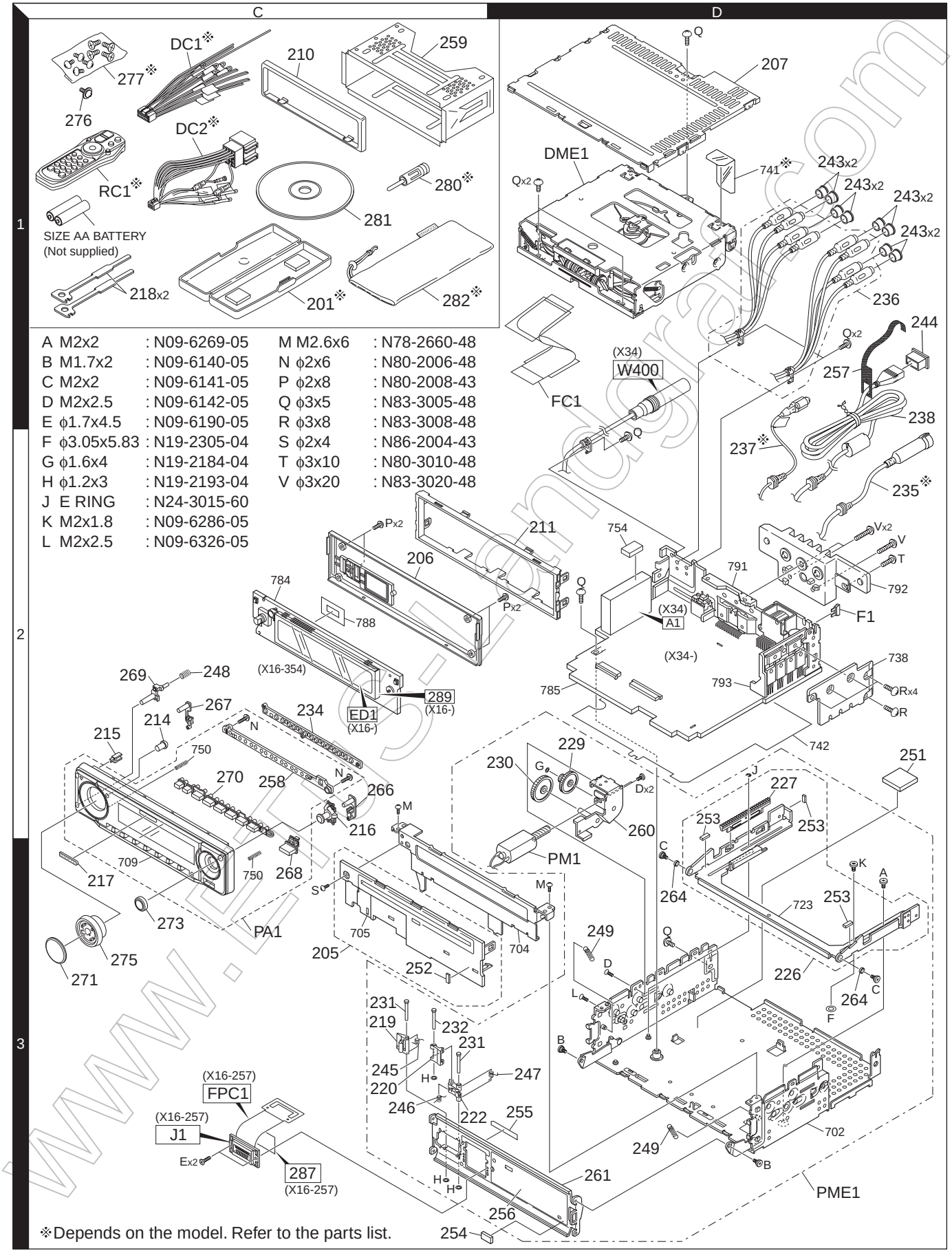

A M2x2	: N09-6269-05	M M2.6x6	: N78-2660-48
B M1.7x2	: N09-6140-05	N ϕ2x6	: N80-2006-48
C M2x2	: N09-6141-05	P ϕ2x8	: N80-2008-43
D M2x2.5	: N09-6142-05	Q ϕ3x5	: N83-3005-48
E ϕ1.7x4.5	: N09-6190-05	R ϕ3x8	: N83-3008-48
F ϕ3.05x5.83	: N19-2305-04	S ϕ2x4	: N86-2004-43
G ϕ1.6x4	: N19-2184-04	T ϕ3x10	: N80-3010-48
H ϕ1.2x3	: N19-2193-04	V ϕ3x20	: N83-3020-48
J E RING	: N24-3015-60		
K M2x1.8	: N09-6286-05		
L M2x2.5	: N09-6326-05		

※Depends on the model. Refer to the parts list.

www.EE-Schematics.com