EXPLODED VIEW (UNIT)

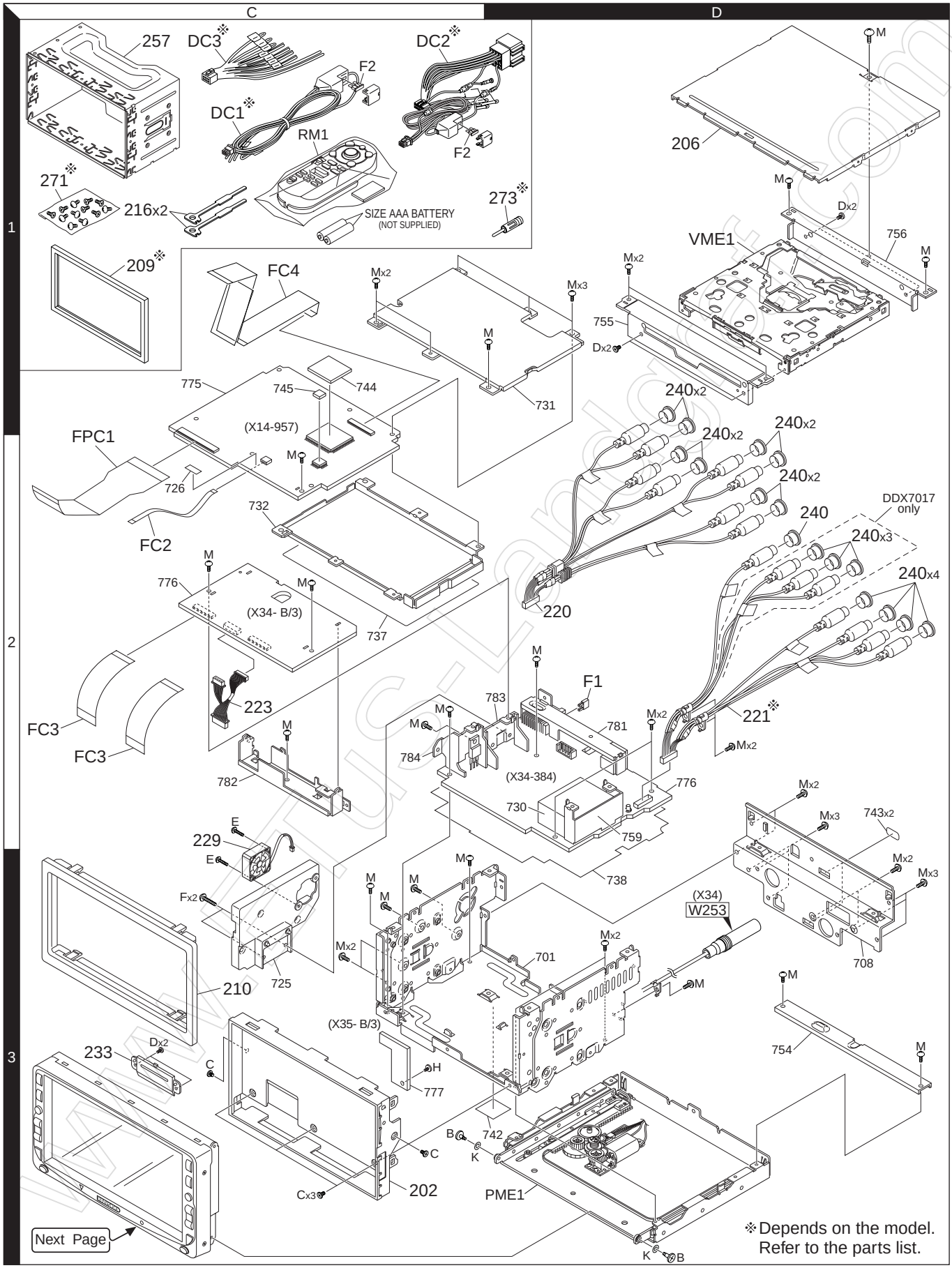

Parts with the exploded numbers larger than 700 are not supplied.