EXPLODED VIEW (UNIT)

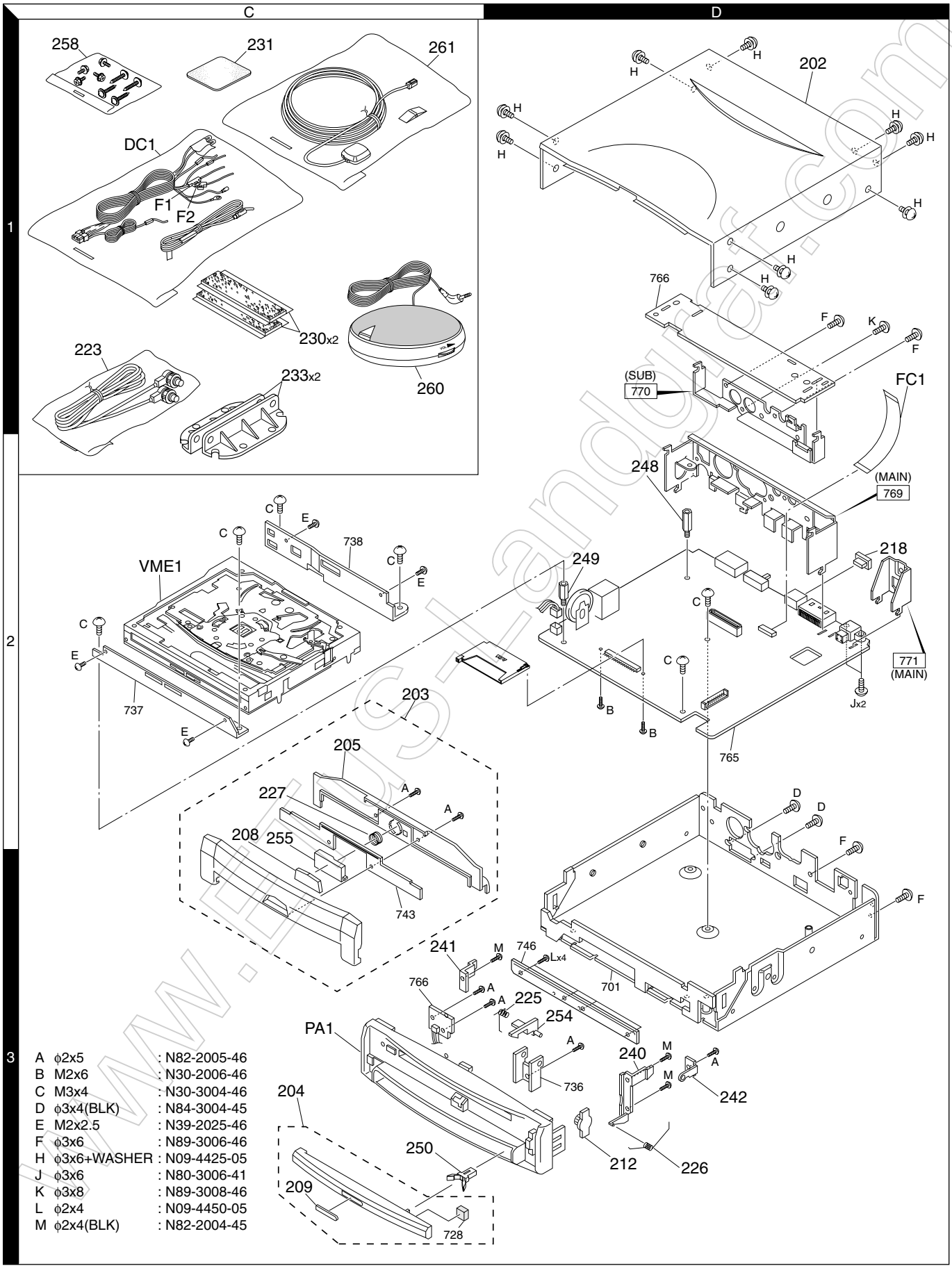

A	φ2x5	: N82-2005-46
B	M2x6	: N30-2006-46
C	M3x4	: N30-3004-46
D	φ3x4(BLK)	: N84-3004-45
E	M2x2.5	: N39-2025-46
F	φ3x6	: N89-3006-46
H	φ3x6+WASHER	: N09-4425-05
J	φ3x6	: N80-3006-41
K	φ3x8	: N89-3008-46
L	φ2x4	: N09-4450-05
M	φ2x4(BLK)	: N82-2004-45

www.HiStandard.com

Parts with the exploded numbers larger than 700 are not supplied.