EXPLODED VIEW

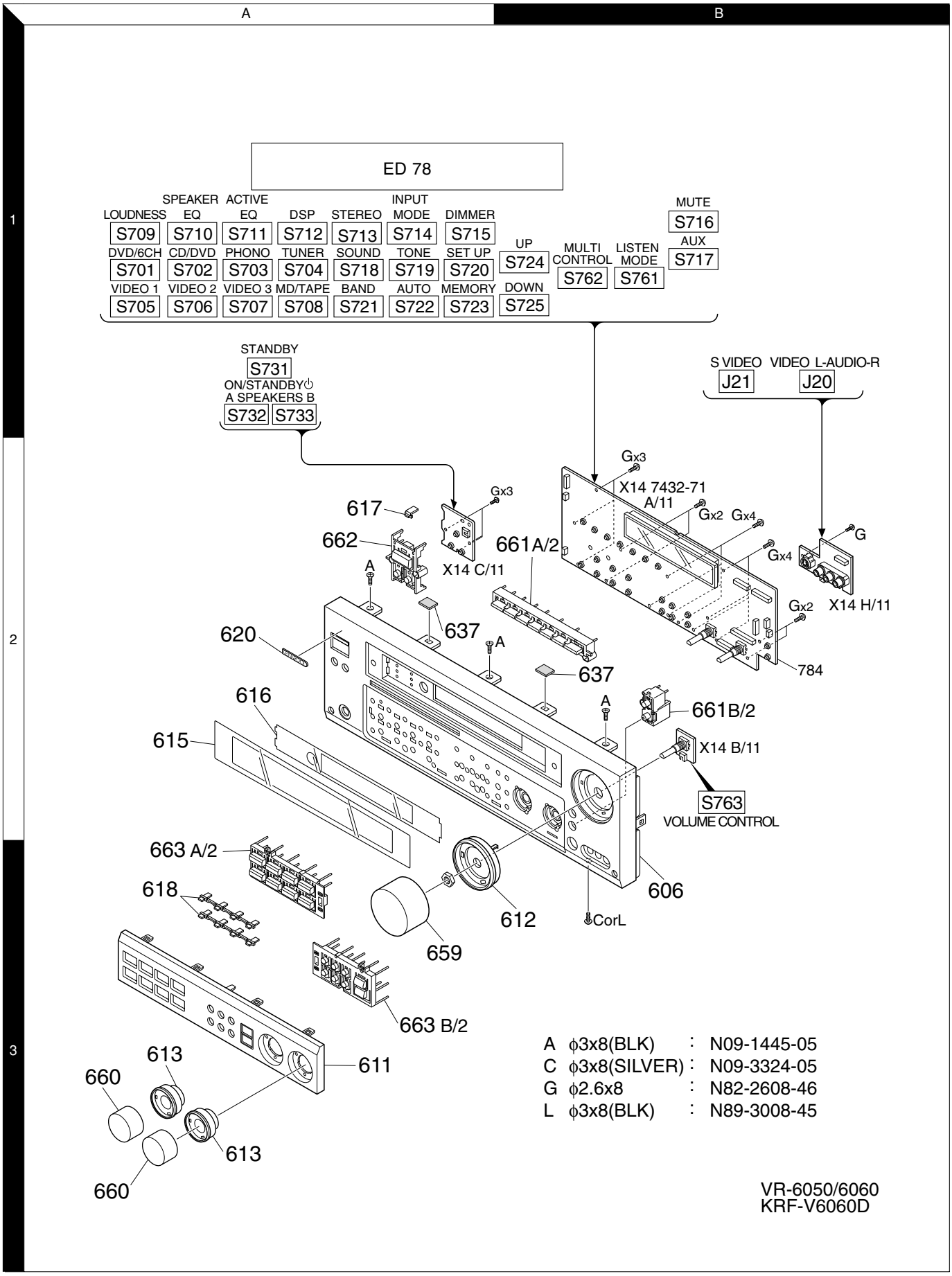

Parts with exploded numbers larger than 700 are not supplied.